MagneQuest™

PASSION PERFORMANCE TRADITION

PHILADELPHIA, PENNSYLVANIA USA

MagneQuest
1404 East Bristol Street
Philadelphia PA 19124 USA

Voice: 215-288-4816
Fax: 215-288-4816

MQ-565

PushPull Output Tranformer (17 Watt)

Primary: 7100 Ohm CT

Secondary: 8 or 16 Ohm

Dimensions

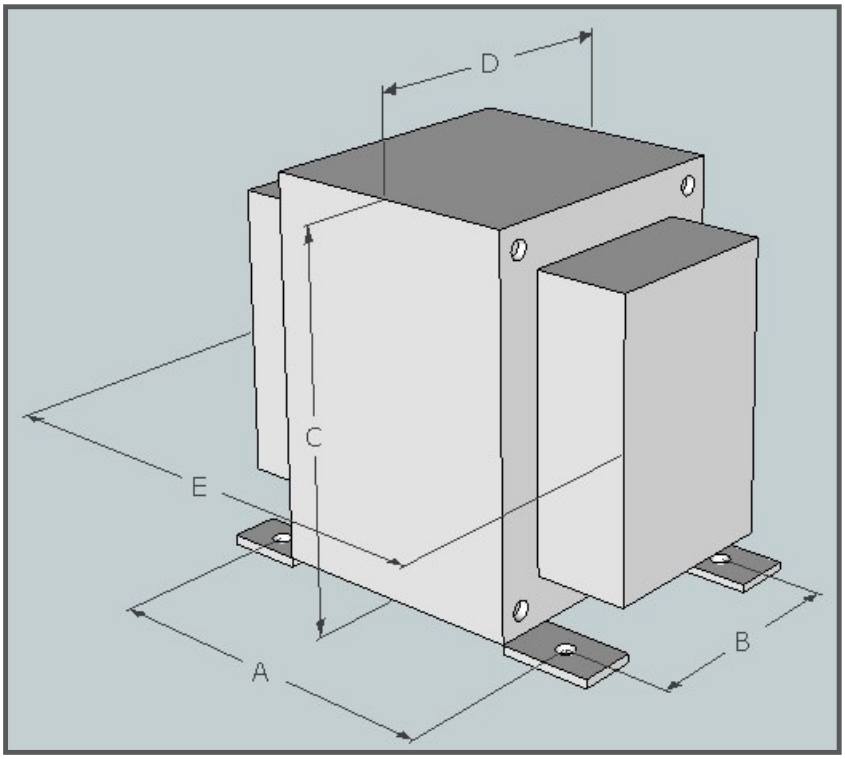

A	B	C	D	E
60mm	51mm	80mm	64mm	83mm
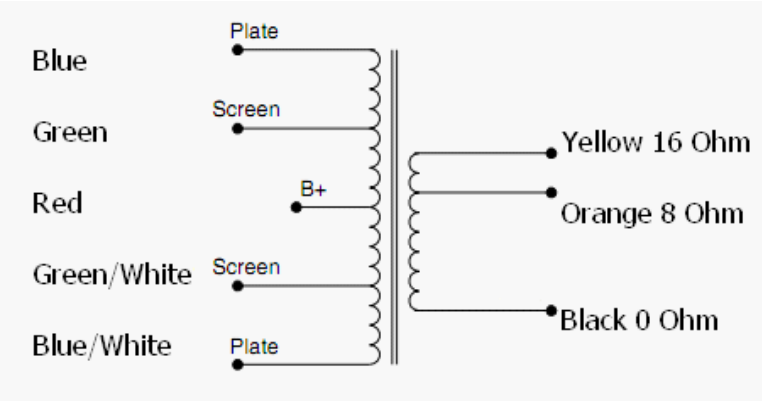
Hookup: